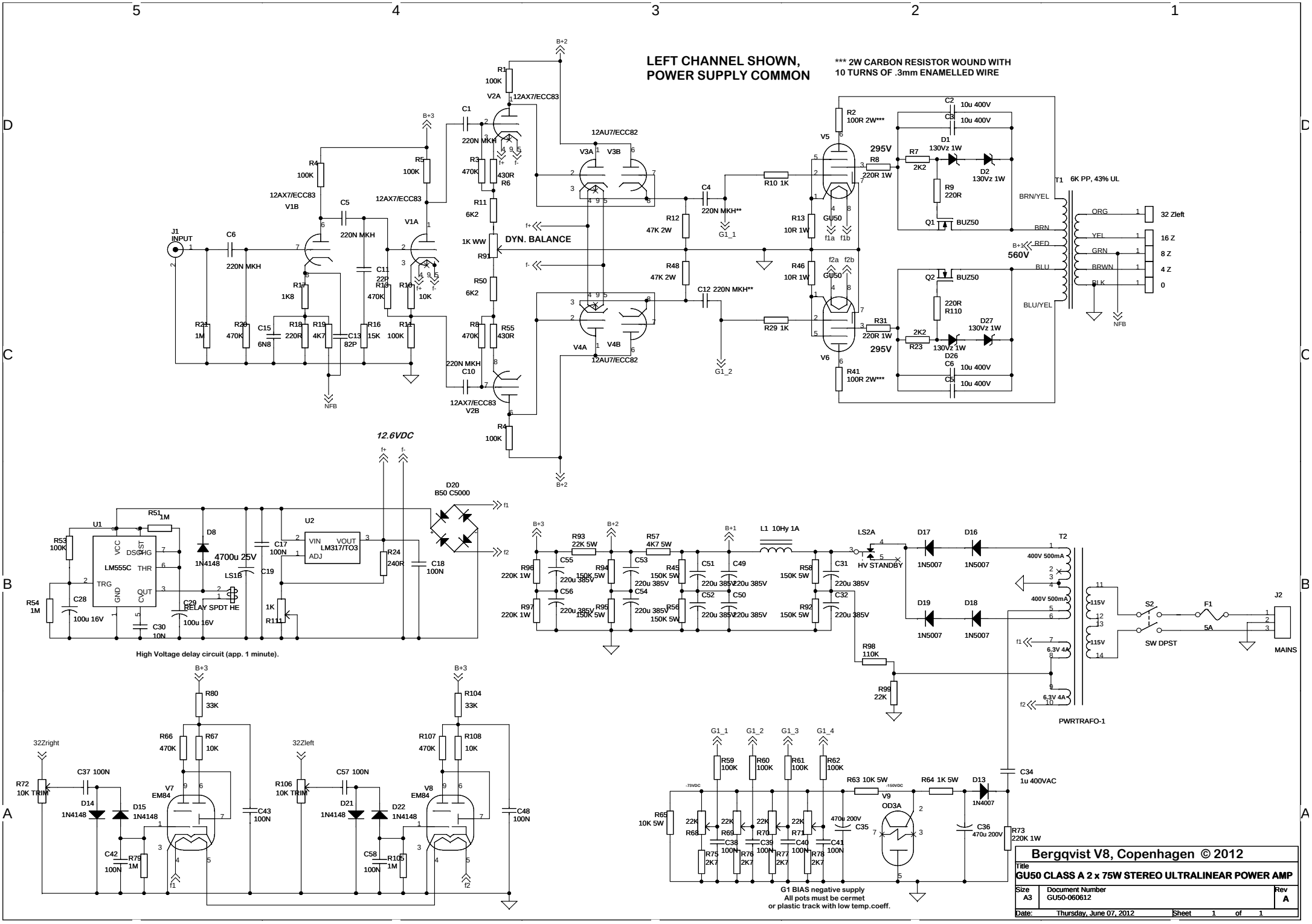
LEFT CHANNEL SHOWN,
POWER SUPPLY COMMON
*** 2W CARBON RESISTOR WOUND WITH
10 TURNS OF .3mm ENAMELLED WIRE
DYN. BALANCE
12.6VDC
High Voltage delay circuit (app. 1 minute).
G1 BIAS negative supply
All pots must be cermet
or plastic track with low temp.coeff.
Bergqvist V8, Copenhagen © 2012
Title
GU50 CLASS A 2 x 75W STEREO ULTRALINEAR POWER AMP
Size A3
Document Number GU50-060612
Rev A
Date: Thursday, June 07, 2012
Sheet 1 of 1